On unit I reversed:
These are not connected
to the battery:

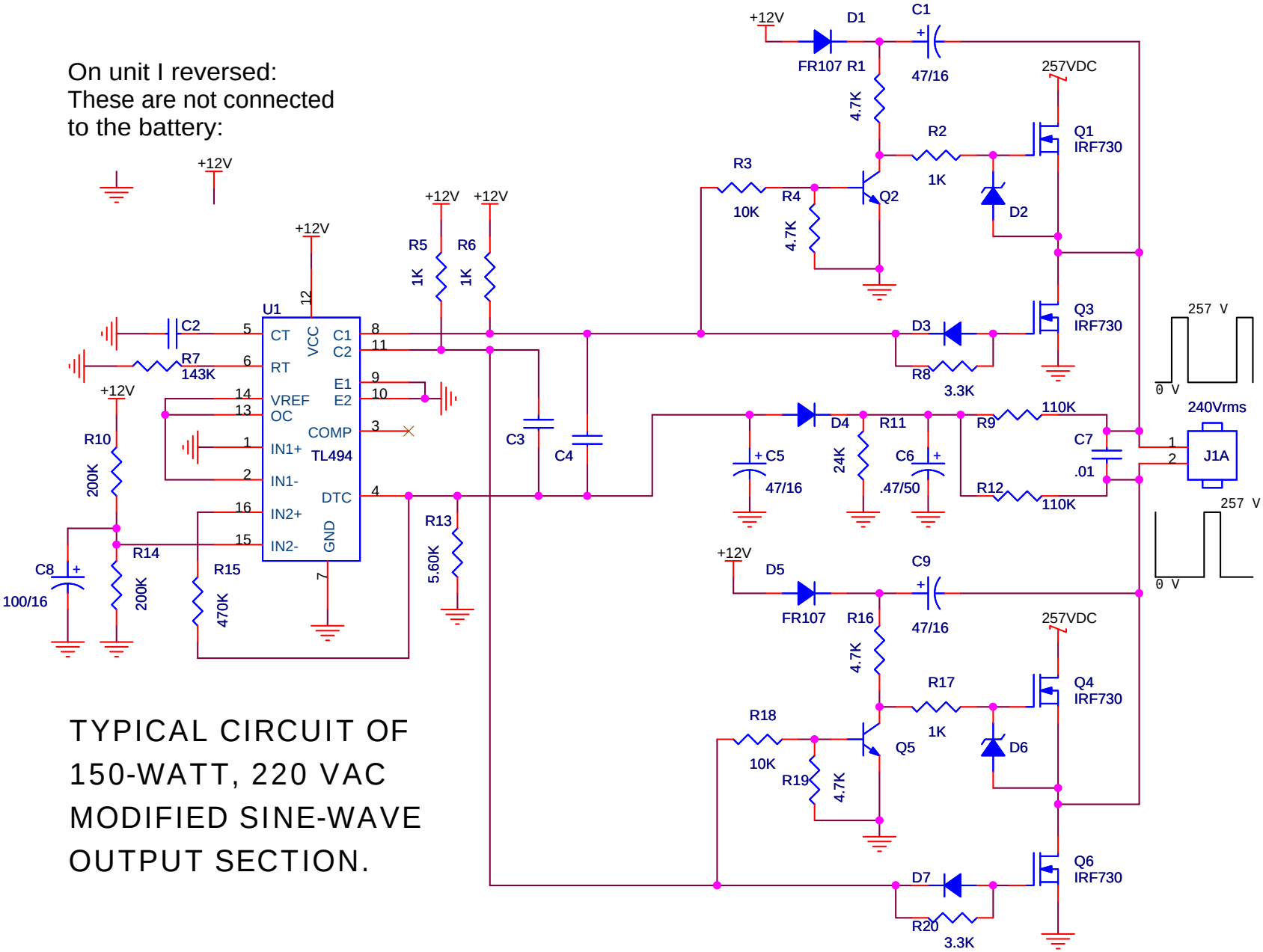

TYPICAL CIRCUIT OF
150-WATT, 220 VAC
MODIFIED SINE-WAVE
OUTPUT SECTION.